1.0 6.6KV SWITCHBOARD

1.1 Codes and Standard

All equipment and materials shall be designed, manufactured and tested in accordance with the latest applicable Indian Standards (IS) and IEC with specific conformity to the latest editions of the following standards, except where modified and/or supplemented by this specification.

IS:12729	General requirement for switchgear and control gear for voltage exceeding 1.1kV
IS:13118	General requirement for circuit breaker for voltage above 1000V
IS:3472	Metal enclosed switchgear and control gear for voltage above 1000V
IS:5082	Material for data for aluminium bus bar
IS:9920	Switches and switch isolator for valve above 1000V
IS:9921	AC disconnectors (isolators) and earthing switches for voltage above 1000V
IS:9046	AC contactors of voltage above 1000V upto and including 1100V
IS:12661	HV motor starter
IS:13703	Low voltage fuses
IS:2705	Current transformers
IS:3156	Voltage transformers
IS:1248	Electrical indicating instruments
IS:722	Integrating meters
IS:3231	Electrical relays for power system protection
IS:6875	Control switches and push buttons
IS:694	PVC insulated cables for working voltage up to including 1.1kV
IS:2544	Porcelain post insulators for system with nominal voltage greater than 1.1kV
IS:11353	Guide for uniform system of making an identification of conductor and apparatus terminal
IS:5578	Guide for marking insulated conductors
IS:5	Colors for ready mixed paints and enamel
IEC 62271-1	Common specification for HV Switchgear & Control gear.
IEC-62271-100	Specification for High Voltage Alternating Current Circuit Breaker

© 2016 MECON Limited. All rights reserved

IEC-62271-102	Specification for HV Alternating Current Disconnectors and Earthing Switches.
IEC-62271-200	Specification for AC metal enclosed switchgear and controlgear for rated voltage above 1KV and upto and including 52KV

1.2 General Requirement

- Manufacturer of switchgear panel shall be same as the manufacturer of circuit breaker. Circuit breaker and panel shall be supplied from the same unit/factory. Circuit Breaker manufacturer shall utilize their own make vacuum interrupters (bottles) if being manufactured by them and the type test certificate for the combination shall be submitted.
- In all locations (and also all circuit breakers in the one switchboard) shall be of same model & design, except for the continuous current rating.
- The switchgear shall be of metal clad, self-standing, dust proof construction, indoor cubicle type fitted with truck mounted Vacuum circuit breakers in fully draw out execution. Horizontal isolation and ground operated (not cassette type.) Fixed contacts on busbar and breaker side shall be flat/tulip type contacts with self aligning mechanism flat type and moving contacts on breaker side shall be jaw type or tulip type, with self aligning.
- The circuit breaker shall confirm to E2 & M2 duty class for 10000 operations as per IEC-62271-100.
- Circuit breaker shall confirm to C2 class for capacitive breaking current.
- The circuit breakers shall be suitable for following duties.
  - ⇒ To withstand inrush magnetizing currents of transformers.
  - ⇒ Transient surge produced by one CB due to severe chopping during rapid interruptions of inductive current e.g. motors, shall be within limits allowable for overhauled motors according to IEC34 part-1.
  - ⇒ Suitable surge suppressor/arrestor (10kA) shall be provided for all the outgoing motor feeders which shall be mounted separately on the fixed compartment only (i.e. cable chamber/ breaker cubicle) but not on the draw-out movable VCB trucks. Calculation of rating & suitability of SA shall be furnished.
  - ⇒ To withstand switching off over voltages caused due to break of lightly loaded low capacity cage type induction motors. It shall also withstand DOL starting of motor with large starting time, and repeated starting like one hot start and two successive cold starts.
  - ⇒ All normal current rating of breaker shall be in-panel rating and not free air rating. Required normal current rating shall be achieved by single breaker principle inside the cubicle without fan.
  - ⇒ Bidder to furnish calculation for de-rating factor at 50 deg ambient and type test certificate shall be submitted to substantiate the same. The temperature rise shall be as per IEC.
  - ⇒ To withstand switching off over voltages caused due to break of lightly loaded low capacity cage type induction motors. It shall also withstand DOL starting

© 2016 MECON Limited. All rights reserved

of motor with large starting time, and repeated starting like one hot start and two successive cold starts.

⇒ Transient surge produced by one CB due to severe chopping during rapid interruptions of inductive current e.g motors, shall be within limits allowable for overhauled motors according to IEC-34 part-1 otherwise suitable surge absorber shall be provided.

⇒ To withstand in rush magnetizing currents of transformers & capacitor bank 'ON' and 'OFF' operation.

- The controls, indicating lamps, relays and meters shall be mounted on breaker cubicle itself.
- Operation counter, close/open mechanical indications spring charged/discharged indication shall be provided.
- All circuit breakers shall have motor operated spring charged independent closing and shunt tripping coil (220V DC.) Closing coil shall be suitable to operate between 85% to 110% of voltage and tripping coil between 70-110% of rated voltage. Spring charging motor shall operate between 85-110% and motor shall be of universal type and operate with 240V AC.
- Heat shrinkable sleeving of all busbar, live parts shall be provided.
- Raychem sleeve rated for the full voltage of the switchboard shall be provided for entire busbar in the switchboard. Reusable removal shroud of rated voltage shall be provided at all joints. The insulation shall be tested for the full voltage during inspection.
- All power carrying Busbars, Jumpers, feeder connections as applicable in the cubicle also shall be of same current rating as that of the breaker and not according to CT primary rating. This includes any power carrying jumpers / busbars connected to CT.
- Wherever conventional Jumpers in the cubicle is used the rating should be same as that of breaker otherwise seal off bushing type fixed isolating contacts in power circuit of panel shall be preferred for preventing any arc transfer from breaker compartment to bus bar and CT cum cable compartment in the event of internal arc in breaker compartment.. Only the jumpers connected to CT shall be rated according to CT rating. There should not be any air gap between CT primary and secondary to avoid failure on account of partial discharge.
- A manually operated device to enable charging of closing springs.
- Manual/ Mechanical tripping arrangement for emergency tripping of CBs.
- All circuit breaker truck shall have service, test and draw out positions. Test position shall engage only the auxiliary (control) contacts to close the Circuit Breaker during testing. All the three interrupters of individual phases shall be mounted on a common phase segregated hydrophobic epoxy body mounted on a truck for better insulation and avoidance of non-simultaneity of poles and for 6.6kV. It shall have interrupters housed in totally individual encapsulated insulating poles to avoid any surface discharge. Individual interrupter housed in an enclosed pole design can also be provided.
- Space heater shall be provided for each compartment of 6.6 KV switchboard and same will be operated by differential thermostat to maintain temperature

© 2016 MECON Limited. All rights reserved

of 5deg higher than ambient. Suitable indication for healthiness of space heater shall be provided.

- Bus riser panel shall have removable link with necessary interlocking arrangement adjacent to bus coupler panel.
- Panel door switch shall be provided for illumination inside panel.
- Mechanical as well electrical anti pumping feature for the breakers shall be provided.
- All live parts shall be insulated by taping, supported by suitably designed insulators. Proper insulation of bus bars upper and lower contacts of breakers, vacuum bottles (for VCB) and sealing of opening of bushings shall be provided to eliminate accidental contacts. Switchboard busbars shall be taped by proper grade of insulating tape.
- The cubicle shall be provided with a position changing gear arrangement in such a way that by engaging detachable device from outside the front door, it shall be possible to move the breaker truck and change position without opening the cubicle door. Facilities for pad locking in each position shall be provided. The cubicle shall be provided with necessary arrangement for smooth rack in and rack out. Facility shall be provided for all operation with door closed. Shutters shall be earthed metallic insulated and shall have provision for padlocking. Breaker should also having facility for position padlocking facility by locking mechanical push to trip and push to close buttons to avoid any inadvertent movement of breaker from test to service position when operator is working on cable side.
- Safety shutters complying with IEC 62271-200 shall be provided to cover up the fixed high voltage contacts on bus bar and cable side when the truck is moved to ISOLATED position. The shutter shall move automatically, through linkage with the movement of the truck. Necessary tests shall be carried out in line with IEC 62271-200.
- Operation of all feeders shall be manually.
- Each cubicle shall have mimic diagram with metal strip on front & rear.
- Each cubicle shall be of compartmentalized construction as per "Loss of Service continuity" and "Partition Metallic" criteria of latest edition of IEC 62271-200 and shall have separate compartments for bus bars, CTs and outgoing cables, metering & protection devices.
- The switchgear construction shall be such that the operating personnel are not endangered by breaker operation and internal explosions. Front portion of the panels shall be specially designed to withstand the same.
- All circuit breaker trucks of same rating shall be identical in all respects (except metering and protective devices) and shall be interchangeable with similar breaker panel. However, it shall not be possible to insert circuit breakers of lower current rating into cubicles rated for higher current.
- Continuous copper earth bus shall be provided throughout the board.
- The position of various control switches, push buttons, levers etc. requiring manual operation shall be at a height not less than 450mm and shall not exceed 1850mm from the finished floor level.

© 2016 MECON Limited. All rights reserved

- The phase to phase and phase to earth clearance for 6.6KV switch board in all chambers shall be preferred to be of minimum 90 mm.
- CT shall be positioned in such a way so that they are easily replaceable and their secondary terminal shall be easily accessible.
- The controls, indicating lamps, relays and meters shall be mounted on breaker cubicle itself.
- Operation counter, close/open mechanical indications spring charged/ discharged indication shall be provided.
- For indoor switchboards CB rating shall be considered for determining the Busbar Jumpers rating for the Incomers/ O/G Feeders instead of CT Ratio.
- A built-in /separate spring charging handle to enable charging of closing springs.
- Manual / Mechanical tripping arrangement for emergency tripping of CBs.
- All circuit breaker truck shall have service, test and draw out positions. Test position shall engage only the auxiliary (control) contacts to close the CB during testing. Circuit breaker shall be vacuum type for 6.6 KV system.
- Individual segregated pole type construction shall be considered for indoor switchboard.
- Indoor switchboard busbar chambers shall not have any separation in between the adjacent panels through seal off bushings.
- Panel front should be closed with a pressure resistance door which should open to an angle of almost 130° and shall be provided with a switch for illumination inside panel. Panel illumination lamp with socket shall be provided in low voltage compartment.
- Both Electrical & Mechanical Anti pumping feature shall be provided.
- Pressure relief device shall be provided in each high voltage compartment of a panel, so that in case of fault in a compartment, the gases produced are safely vented out, thereby minimizing the possibility of its spreading to other compartments and panels. The pressure relief device shall not however reduce the degree of protection of panels under normal working conditions. To demonstrate that the pressure relief device operates satisfactorily the Bidder shall carryout test in line with IEC 62271-200 Annex – A, as a type test.
- Each cubicle shall have mimic diagram with metal strip. (preferably)
- All circuit breaker trucks of same rating shall be identical in all respects (except metering and protective devices) and shall be interchangeable with similar breaker panel.
- All breaking/making duties shall be at 6.6 KV for 6 KV system respectively as per IEC Standard.
- Breakers controlling motors must be tested for switching motor over voltage test as per Clause-3.6 of IEC 1233, 1994.
- Space heater with thermostat to be provided in each breaker and cable chamber, line Pt, bus PT and dummy panels.

In the design of the switchgear, the following positive interlocking shall be provided.

© 2016 MECON Limited. All rights reserved

1. It shall not be possible to move the truck from the isolated to the Service position unless low voltage plug and socket connections have been made.
2. It shall not be possible to disconnect the low voltage plug and socket as long as the circuit breaker truck is in service position.
3. It shall not be possible to withdraw the truck from the isolated position without disconnecting the low voltage plug and socket.
4. It shall not be possible to move the truck from the service to the isolated position or vice-versa with the circuit breaker in the 'ON' position.
5. It shall not be possible to switch on the circuit breaker when the truck is in between the isolated and the service positions (except in test position).
6. CB in test position with auxiliary supply disconnected shall be indicated as isolated position
7. Breaker compartment door can be padlocked in both test and service positions. In the test position-locking arrangement (by Double Bit Key) top revent rack in/out of the breaker shall be possible.
8. It shall not be possible to open the circuit breaker enclosure when the breaker is ON or to have access to any part of the draw out assembly which is live when the circuit breaker is in the service position.
9. Shutters shall be lockable in closed position and earthed metallic.
10. Rack in/out of CB from test to service position and vice versa only with door closed.
11. While opening the rear side cover (in all feeders) the breaker must be tripped through heavy duty high quality limit switch.
12. Where local/remote selector switches are called for, it shall be ensured that the philosophy of operation of local / remote switch should be –

* For outgoing Transformer and HT MCC feeders: the breaker can be closed locally if the breaker truck is in the test or service position.
* For the motor feeders: the breaker can be operated from Remote panel (from hop) when the breaker truck is in service position and the local/remote selector switch is in Remote position. Breaker can be closed in local position when breaker is in TEST position only
* The breaker can be tripped locally from TNC regardless of the position of the Breaker truck either in test or service and either in local or remote mode.

1.3 Operating Mechanism

The operating mechanism parts shall be designed to give longer life, trouble free operation and require minimum maintenance. The Circuit Breaker mechanism shall satisfy the Mechanical Endurance class M2 for 10,000 operations as per latest edition of IEC 62271-100.

The material and components used shall have chopping current limited to minimum.

1.4 Insulation Levels

Nominal voltage (KV)	:	6.6

© 2016 MECON Limited. All rights reserved

Highest system voltage (KV)	:	7.2
One minute power frequency withstand voltage (KV)	:	20
1.2/50 micro sec impulse withstand voltage (KVp)	:	60
Clearance in air (Phase-Phase & Phase-Ground) (mm) for upto 12 kV	:	Ph-ph-90 mm and ph-E-90mm

1.5 Strength

- Rated short time withstand current shall not be less than the system short circuit level specified for the stipulated duration.
- Rated peak withstand current shall not be less than 2.5 times the system short circuit level.

1.6 Auxiliary Circuits for Control & Protection

1. Control supply buses for AC and DC
2. Signalling supply
3. PT secondary voltage

All control & protection supply can be done through internal wiring instead of auxiliary bus.

1.7 Provision of Surge Suppressor

Breakers (VCB) that give rise to overvoltage surges due to current chopping phenomenon, surge suppressors to be provided at the load side terminals of the breakers to limit the switching surges to value limited for as per IEC. This shall be provided for all motor feeders after the breaker contacts before CT. Protection shall be interconnected with respective breaker. Surge suppressor shall be metal oxide gapless type, 10kA discharge current capacity.

1.8 Annunciation Schemes

- Flag indications for all faults for which individual protective relays have been specified.
- Warning signalling (as applicable) on individual panels:
  a) All transformer warning/signaling conditions (group signal from corresponding transformer control panel / substation.
  b) Loss of trip circuit supply.
  c) Earth fault.
  d) Control supply failure.
  e) PT fuse failure/MCB tripping.
  f) Internal failure relay.

© 2016 MECON Limited. All rights reserved

- Emergency signalling for tripping of HT breakers on fault.
- One common signal for warning and one signal for emergency from each panel to be wired to a common annunciation panel of the switchboard, where specified.
- Annunciators for warning and emergency signalling condition on individual panels of solid state facia window type. Common audio signalling with Accept, Reset and Test push buttons for the switchboard where common annunciation panel is not specified. Audio signalling to have distinct tones for warning and emergency.

1.9 Bus Bar and Connections

- Power buses of high conductivity electrolytic grade copper as per IS : 613-1984. The bus bars shall be tinned coated/nickel coated/silver coated at joints as per IEC.
- The bus bars shall be insulated with Raychem make insulating sleeves of full potential. Even that part of isolating contacts which projects into the bus compartment shall be covered with an insulating sleeve.
- Control and Auxiliary buses of electrolytic grade copper.
- Anti-condensation measures by use of space heaters need not be provided in bus-bar chambers.
- The continuous rating of the main horizontal bus not less than the rating of the incomer specified, where not specified, the rating to be selected for at least 125% of the maximum demand of the switchboard taking into account spare feeders.
- **The vertical bus rating**

For incomer	:	Not less than that of horizontal bus
For outgoing	:	Not less than that of the outgoing breaker, irrespective of relay setting.

- Final operating temperature under continuous operation in enclosure limited as per permissible values stipulated in IEC 62271-1 considering maximum ambient of 50degree Centigrade.
- Both horizontal and vertical bus bars to be designed and supported to withstand the thermal and dynamic stress corresponding to rated short time and peak withstand current specified.
- Cross-section of main horizontal bus to be uniform throughout the switchboard and continuous in one transport unit.
- Bus bar arrangement as per IS:375.
- Phase identification by colour in each panel or colour coded labels on each phase.
- Bus bars (horizontal as well as vertical) shall be provided with heat shrinkable, non-tracking, low absorption type sleeving conforming to international standards to the full potential.
- Bus bar joints and tap off connections of bolted type with zinc dichromite high tensile steel bolts, nuts and spring washers, fishplates with accessories at the end of a transport unit for site connections.

© 2016 MECON Limited. All rights reserved

- All the joints shall be provided with reusable & removable shrouds suitable for rated voltage of the switchboards.
- All busbar support insulators shall be of hydrophobic material having high impact and dielectric strength with an anti-tracking contour.
- Continuous path of Busbar chamber is acceptable. Seal-off bushings not required inside HT switchboard.
- Self-supporting busbars insulated to the full voltage level instead of support insulators can also be provided. In that case, each compartment will be sealed from the adjacent cubicle and busbars will pass through epoxy cast resin bushing.
- Bus bar joints and tap off connections shall be of bolted type with zinc dichromate high tensile stainless steel bolts (grade 8.8), nuts and spring washers, fishplates with accessories at the end of a transport unit for site connections.

1.10 Internal Control Wiring

- Control wiring shall be carried out by 1100V grade PVC insulated, FRLS, single core multi stranded copper wire of minimum cross section 1.5 sq. mm.
- Multi-stranded flexible copper wire of min. 2.5sq. mm shall be used from CT secondary to relay and shall have protection against heat & mechanical damage due to flash over. Use of heat proof sleeves and rigid conduit shall be made to run the control wires from back to front.
- All inter panel AC and DC control supply wiring shall be min. 4 sq mm flexible copper wire
- Wiring and terminal arrangement for all panels shall be carried out as per approved scheme.
- Flexible wires protected against mechanical damage for wiring to door mounted devices.
- Wires identified at each end in accordance with schematic diagrams by interlocked type ferrules. These shall be firmly located so that these do not move. Number of ferrules in place of interlocked type ferrules can also be provided.
- *Color code for control wiring*

AC – Black	Earth wire – Green
DC – Light gray	Trip circuit – Red

- All connections external to a feeder, all the auxiliary contacts of the HV breaker and at least 1 NO & 1 NC spare contacts of the relays shall be brought to terminal blocks.
- Interconnection between panels of adjacent shipping sections to be brought out to a separate terminal block.
- No bunch shall contain more than 12 wires.
- Wiring shall not be joined or tied between the terminal points.
- Control wires shall be run in earthed metallic flexible conduits when laid in HV bus chamber.

© 2016 MECON Limited. All rights reserved

- Not more than two connections shall be provided on any one terminal.
- Heat proof arrangement for the passage of wiring in HT panel.
- All tele-metering signals shall be wired to terminal strips.

1.11 External Terminations

1.11.1 Control Terminations

- 1.1kV grade multi-way open type terminal blocks of non-tracking moulded plastic complete with insulated barriers, stud type terminals, washers, nuts and lock nuts and identification strips.
- All terminals going out of the switch board shall be brought to a separate terminal board marked "External Termination". These will be easily accessible.
- External terminal block shall be provided in the relay chamber with proper clamping facilities for cable dressing.
- Disconnecting type terminal block for CT/PT and for AC/DC supply.
- Control terminals shall be suitable to receive two numbers 2.5 sq. mm copper conductor.
- 20% spare terminals in each control terminal block. Terminal blocks in separate groups shall be provided for transformer marshalling boxes, local push button stations,
- Gland plate for control cables shall be of adequate size to accommodate and to facilitate glanding of all the control cables coming from external equipment.
- Terminal blocks shall be placed separately for internal looping and external looping.

1.11.2 Power Terminations

- Suitable for accepting cable/bus trunking as specified.
- Sufficient space and support arrangement inside each panel to accommodate HT cable termination kits and sealing kits suitable for the size and number of XLPE cables. Minimum head room of cable chamber of cubicle for 6.6kV shall be minimum 700mm with/without using cable pan. If it is with cable pan, then type test reports shall be furnished. Gland plate in cable chamber shall have built in adjustable cable holding damp.
- Where more than one cable has to be terminated per unit, the arrangement shall permit connection and disconnection of cables separately without disturbing other cables.
- Where specified the following cable termination accessories, suitable for the type, size and number of cables to be terminated, to be supplied with switchboard.
  - ⇒ Cable sockets with all HT terminals (sockets set at such an angle that cable tails can be brought up for termination with minimum bending and setting).
  - ⇒ HT cable termination and sealing kits.
  - ⇒ Power cable termination facilities shall be designed to facilitate easy approach to CTs.

© 2016 MECON Limited. All rights reserved

⇒ Double compression type brass cable glands and crimping type tinned heavy duty copper lugs for HT, LT power and control cables.

⇒ Polycarbonate sheet between ph-ph and ph-E to be provided in all cable chambers.

⇒ All power cable terminations shall be covered with silicon rubber boot especially to be provided by cable jointing kit manufacturer.

1.12 Protection and Measurement

1.12.1 Electrical Protection and Metering

- Selection of protective scheme will be based mainly on reliability, sensitivity, selectivity. All main protections shall be fast acting type in order to clear the faulty system from the healthy system in earliest possible time to minimize damage to equipment and ensure continuity of power supply.

  The details of major protections and metering for 6.6 kV system are elaborated below. (Indicative only)

Sl. No.	Feeder Designation	Protection and Metering	
		Protection	**Metering**
1.	Bus Coupler	• Over-Current and Earth fault (50, 51, 51N, 50N) • Check Sync Relay (25). • High speed tripping relay, close & trip circuit supervision relay, aux relays, time delay as required.	♣ 1 no. Multifunction meter. ♣ 3 nos. Ammeter
2.	Incomer	• Over-Current and Earth fault (50, 51, 51N, 50N). • Fuse failure protection of line PT (97) (for alarm). • Check Sync Relay (25). • High speed tripping relay, close & trip circuit supervision relay, aux relays, time delay as required.	♣ 1 no. Multifunction meter. ♣ 3 nos. Ammeter. ♣ 3 nos. Voltmeter with voltmeter selector switch for LINE PT. ♣ 1 no P.F meter ♣ 1 no kWH meter
3.	Transformer Feeder	• Over-Current and Earth fault (50, 51, 51N, 50N). • High speed tripping relay, close & trip circuit supervision relay, aux relays, time delay as required. • Provision of inter-trip	♣ 1 no. Multifunction meter. ♣ 3 nos. Ammeter. ♣ 1 No. kWH Meter

© 2016 MECON Limited. All rights reserved

Sl. No.	Feeder Designation	Protection and Metering	
		Protection	**Metering**
		from downstream switchboard.	
4.	Motor feeder	• Motor rotection relay (99). • Time delayed U/V relay. • Over-Current and Earth fault (50, 51, 51N, 50N). • High speed tripping relay, close & trip circuit supervision relay, aux relays, time delay as required. • Provision for taking RTD/BTD input	♣ 1 no. Multifunction meter. ♣ 1 nos. Ammeter. ♣ 1 no. multifunction Transducer to Remote Ammeter. ♣ Interposing CT for remote ammeter connection. ♣ 1 no kWH meter.
5.	• Bus PT	• HT Fuse on primary • MCB on secondary • Link (Drawout) • Under Voltage (27) with timer • Fuse Failure (97) (for alarm) • Neutral displacement relay (60) • Over Voltage (59) with timer	♣ 1 no. frequency meter in BPT ♣ 3 nos. Voltmeter with voltmeter selector switch. ♣ 1 no. Frequency meter & PF meter
6.	• Line PT	• HT Fuse on primary MCB on secondary Link (Drawout) • Neutral Displacement relay (60)	

Note:-

Except MFM all the meters mentioned above shall be analogue type with 90 degree scale

1.12.2 Protective scheme requirements

- Synchronization check relay/feature shall be provided in all the incomers and buscoupler feeders.
- Synchronization check relay/ feature shall be provided in all the incomers and buscoupler feeders
- Auxiliary relays, timers switches etc. required to make the scheme complete shall be considered as part of the scope of work.

© 2016 MECON Limited. All rights reserved

- All CT-PT shall be suitable for the relay-meter requirement - lead burden
- All CT-PT wires shall be brought to test terminal blocks before connecting to circuits. All protective relays shall be provided with test block with jack for testing of relays.
- The circuits of various protections (coming from other panels) shall be connected to master trip relays through aux. relays (flag indicated). The (MTR) Master Trip Relay shall be VAJH type or equivalent. For incomers & bus coupler feeders electrical reset facility shall be provided in addition to the hand reset feature in MTR.
- VAA type aux. relays shall be provided for each transformer fault. Connection of the relay shall be through links to facilitate maintenance. All external indication, alarm & trip contacts to a feeder shall be wired through flagged aux. relays.
- High end Relay ranges and scale of meters shall be finalized during drg. approval stage.
- Contact arrangement, number of poles/ways in control/selector switches shall be as per the requirement/approved scheme.
- For control supply distribution, panel to panel separate set of terminal blocks shall be provided at top of the panel. All items/accessories required for above in each panel and in incoming panels shall be provided by the supplier.
- All relays shall be hand/self-reset type with flag indication. NO/NC contacts for relays shall be as per the requirement of approved protection, annunciation & interlock schemes. Wherever required supplier shall provide aux. relays for contact multiplication.
- Trip Circuit supervision features can be a part of the numerical relay or if provided separately through a relay shall be self-reset type with flag (hand reset). Close Circuit supervision shall be through a separate relay which shall be self-reset type with flag (hand reset). Close circuit supervision can also be a part of the numerical relay (NR) if the features are available in NR.
- Annunciation facia shall be mounted on each panel / separate switchgear panel and details shall be finalized during drawing approval stage.
- Centre line of switches, lamps, meters shall be matched to give uniform
- Appearance and mounting height of switches shall be between 1.1 to 1.8 m.
- Intelligent Electronic Devices (IEDs) shall be installed in the 6.6 KV switchgear panels for control, measurement and protection. The IED shall measure voltage, current, active power, reactive power, power factor, energy, etc having minimum accuracy of 1.0%. The energy readings shall be in non-volatile memory and IED shall not use any battery back-up. Four quadrant energy measurement shall be considered for all HT feeders.
- Each feeder shall have master trip relay and close/trip coil supervision relay.
- Aux. Relays to be considered as per scheme requirement.
- Relays shall be mounted on the HT switchboard itself unless otherwise specified.
- All protection trip from 415V switchboard to HT switchboard of various substations shall be hardware wired.

© 2016 MECON Limited. All rights reserved

- Local /Remote selector switches, Trip selector switches, close permissive switches, TNC Switches, Synchro Switches, Auto/Manual selector switches, Emergency pushbuttons etc shall be provided in the panels as required to fulfill the control logics.
- Beside multifunction meter, Analog voltmeters, Analog frequency meters and Analog ammeters shall be provided in all the incomers and interconnector feeders.
- Analog Ammeters shall be provided in all the outgoing feeders.

1.12.3 Specification for MFM:

Provision of individual multi-functional metering system for all incoming and outgoing line

Meters should be capable to measure the following parameters

- KWH, KVArH, KVAH ((import and export).
- Meter should be capable to display the instantaneous parameters like voltage, current, PF, Frequency, Inst. Load etc.
- Meter should record data in its memory with a retention time of at least 10 years for parameters like Active Energy, Apparent Energy, Av. Voltage, Av. Current, PF which can be viewed upon downloading through CMRI in tabular as well as graphical view for at least 35 days.
- Meter should be capable to record the Maximum demand on 15/30 mins integration period.
- Meter should have a Four Line seven-digit LCD display with quadrant identification and power level indication.
- Meter should be capable of reading the Total Harmonic Distortion for current, voltage and power.
- Meter should record the True RMS Value
- Meter should be of Accuracy Class 0.2S
- Compliance to IS 14697, IEC 62053-22
- Meter should be of site/field configurable 3P3W/4W and CTR and PTR type.
- Meter should record the Maximum demand for an IP of 15/30 mins
- Meter should be capable to provide whole day data / Midnight snapshots for energy parameters upon downloading
- Meter should have MODBUS communication via RS 485 for online application
- Meter should be have a Calibration LED for periodic site accuracy testing
- Meter should have the setup page password protected so that it can be secured after installation.

Approved Make/Model : Secure make Elite 445 or equivalent

1.13 Current Transformer (Panel Mounted)

© 2016 MECON Limited. All rights reserved

- Separate cores shall be used for, over current protection and measurement purposes. CT's on incomer side shall be mounted in the bus before incomer breaker and CT's for outgoing feeder shall be put after the breaker.
- Short time thermal and dynamic ratings and insulation level of CT's shall be similar to rating of associated breaker.
- Short time ratings and insulation level of CT's shall preferably be similar to rating of associated breaker. However same may be different, based on various CT parameters for 6.6kV, SCR shall be 40 KA for 1 sec for CT ratio of 250A & below and above 250A, SCR shall be 40 KA for 3Sec. (preferably)
- CT ratios specified are provisional. Where outputs and accuracy are not specified, these shall be such as may be required by the circuits in which they are used. Generally the protection CTs and metering CTs shall have 5P20 and 0.2 class respectively.
- All CTs depending upon primary current rating shall be non-hygroscopic epoxy cast resin insulated & bar primary type. CT may be wound primary up to 250A. There should not be any air gap between primary and secondary of CT to avoid failure due to partial discharge between primary and secondary.
- CT's shall have shorting link on secondary side to facilitate insertion of meters on secondary side without opening CT circuits.
- CT Ratio are not marked on the Single Line Diagram attached with this specification. However indicative CT ratios shall be provided in the SLDs submitted along with the Bidder's offer.
- All CTs shall have class F insulation.
- ICT for 5VA burden shall be provided for all motor feeders for 6.6 KV system for the purpose of remote metering.

Make of Current & Potential Transformers : Kappa /Jyoti/Siemens/Abb/L&T/Schneider

1.14 Potential Transformers

- Shall be cast resin insulated type mounted on withdrawable truck and accessible from front end and shall be withdrawable without affecting power circuit.
- PTs shall have fuses on high voltage side and MCBs on low voltage sides.
- Low voltage star winding shall have all three phase and neutral connections brought out to terminals and one phase shall be earthed.
- Insulation levels shall be similar to rating of associated board.
- Accuracy class 0.5/3P shall be used if not specified in SLD.
- VA burden shall be selected based on meters and relays connected with the PT from the following standard values: 100VA, 200VA
- The PT earth fault factor shall be as per table 2 of 1S-3156, Part-I, 1992.
- All PTs shall have class F insulation.
- For CTs and PTs: switch gear manufacturer's own make can be acceptable however they must have the in house manufacturing facility (casting and winding), testing facility and should have type tested design.

1.15 Relays

© 2016 MECON Limited. All rights reserved

- All protection relays shall be microprocessor based numerical & communicable type (IEC-61850 compliant) for connection to the proposed SAS/SCADA system.
- All relays shall be flush mounted in dust proof cases and shall be mounted on front side of cubicle.
- The numerical relays provided for HT feeders and shall have facility to filter out inrush currents so that lower setting for short circuit protection could be utilised.
- All protective relays shall be draw-out type.
- Major relays are as indicated in the specification.
- Master trip relay shall be hand reset and shall have 3NO and 3NC contacts in addition to those required by the protection/control scheme.
- All timers and Aux. relays shall have flag indicators & protection relays shall have LED indication to indicate operation of the relay.
- Relay ranges, exact type, number of aux. relays, timers shall be finalized during drawing approval stage.
- All instantaneous / IDMT current protection relays shall be of 3 pole type.
- In HT switchboard two nos. bus PT's, with U/V relays neutral displacement relays, timer etc. to be provided.
- No plug-in type relays shall be used.
- Feeder Management Relay (FMR)
- Each feeder shall be provided with FMR which shall perform complete control, protection and monitoring of that particular feeder.
- Following digital signals shall be provided in FMR:
  1) CB ON
  2) CB OFF
  3) Master Trip Operated
  4) TC Healthy
  5) Closing ckt healthy
  6) CB Service
  7) CB Test
  8) Spring Charged
  9) Local/Remote
  10) DC Fail
  11) All Transformer Alarm & Trip Signals (as applicable)
  12) Cable side earthed (As applicable to a feeder)
  13) Bus earthed (as applicable to a feeder)
  14) Any other signal as listed in the Automation writeup.
- The FM Relay shall be so selected that all protective functions configured on the relays shall be displayed on the SAS through IEC-61850 communication protocol.

© 2016 MECON Limited. All rights reserved

- All the necessary control & Interlock logic for that particular feeder shall be built within the relay through graphic means with CFC.
- Shall have inbuilt O/P contacts rated for direct connection to trip & close coil.
- Shall have self diagnostic features with watchdog output.
- Shall have I,V, P,Q, Cosϕ and energy measurement capabilities
- Shall have graphical display unit.
- 20% spare i/o shall be available after complete engineering for future use.

1.16 Salient Specification points for Numerical relays:

- Relay shall have Large Graphical display with dynamic mimic
- Relay shall have minimum 8 freely configurable LEDs apart from fixed LEDS for relay ready/IRF, protection start & protection trip.
- Relay shall have Front port for local one to one communication and Rear RJ45 Port for remote communication on native IEC61850 protocol.
- Relay shall have 1000 + event records and 25 fault records with date and time.
- Relay shall have WEB HMI feature to facilitate relay parameterization and fault record even in the absence of dedicate relay software
- Relay shall have minimum 12 Digital inputs (apart from those used for trip circuit supervision) and 10 output contacts + Dedicated contact for IRF.
- Relay shall have dedicated Disturbance record facility apart from event & fault recording.
- Offered relays should support redundancy on HSR/PRP methodology.

Make of Relays : Areva /Siemens/ABB/L&T

1.17 Indicating Instruments

- All indicating instruments shall conform to IS: 1248-1983 and IS - 2419-1979.
- Shall be capable of withstanding system fault current taking account CT saturation.
- Shall be back connected.
- Shall be located in the upper part of the panel.
- Shall have 144 sq. mm square flush case, non-reflecting type, clearly divided and indelibly marked scales, sharply out lined pointers and zero adjusting device.
- The minimum scale reading shall not be more than 10%. Maximum reading shall be 15% full load for transformers panels.
- Each voltmeter shall be calibrated with coil hot. The scale shall be open between 60% to 125% of normal volts and shall be suppressed below 60% of normal volts.
- Class of accuracy shall be 0.5 or better.
- The full load reading of each ammeter shall occur at the most pen part of the scale the minimum scale reading shall not be more than 10%. Maximum reading shall be 15% full load for transformer panels and 600% full load for motor panels.

1.18 Annunciation

© 2016 MECON Limited. All rights reserved

- The annunciator shall be microprocessor based, facia window type.
- Hooter and bell for trip and alarm indication respectively.
- Shall be suitable to work on DC supply as specified.
- Test, accept and reset facilities (with push button) shall be provided on each panel.
- Suitable audio - visual indication shall be provided on DC failure. Audio alarm with reset facility shall be provided. Visual indication shall be panel- wise.
- Spare annunciation points shall be wired upto terminal blocks. 20% spare fascias shall be provided.
- Each point shall have two bunch LEDs in parallel.
- All trip points facia shall have red color and non trip points white color.
- The cover plate of facia shall be flush with panel.
- Shall be capable to receive simultaneous signals.
- Shall be capable to receive signal during testing mode.
- Bidder shall ensure the non-presence of spurious signals due to influence of external electromagnetic / electrostatic interference on the annunciation wiring and switching disturbances from neighboring circuits within panels.
- All interconnections, bell hooter, buzzer, alarm facility, push button etc. required to achieve complete function of above scheme.
- Sequence shall be as follows:

	VISUAL	AUDIO
ON OCCURRING OF FAULT	LAMP FLASHING	ON
ON ACCEPTING	LAMP STEADY ON	OFF
ON RESET (Fault Cleared)	OFF	OFF
ON TEST	LMAP FLASHING	ON

- Annunciation facia (minimum 12 windows) shall be mounted on each outgoing switchgear panel. A common alarm & annunciation facilities for control AC and control DC system with necessary flashers, hooters, bells as required shall be provided in the switchboard. However, details shall be finalized during drawing approval stage.
- Bus coupler, Incomer and tie shall have minimum 16-window fascia.
- 20% spare window shall be available in each annuciator for future use.
- Warning and emergency points shall be as per the list approved during detail engineering stage. In general, all tripping points and alarm points shall be annunciated.

1.19 Control Supply

- Control supply buses shall run throughout the switchgear.
- Two DC feeders shall be taken in each board controlled by MCB's.
- In each panel for controlling of its DC supply MCB (DC duty) shall be used. DC auto changeover and manual changeover facility shall be provided.

© 2016 MECON Limited. All rights reserved

Failure of each DC supply shall be monitored in the switchboard as well as at remote.

- 240V AC supply shall be taken from a station aux. board.
- Each section shall have separate feed with automatic changeover scheme.
- Each panel shall have one MCB for controlling its AC supply.
- Sub circuits shall be protected with HRC fuses in each panel for indication lamps, closing and tripping circuits.

1.20 Earthing Devices

- Separate earthing truck shall be provided to facilitate earthing of busbars and any feeder circuit.
- Earthing truck shall have PT and alarm provision. (Separate trucks shall be provided for feeder and bus earthing through bus PT panel in each switchboard). 1 no. earthing truck for feeder earthing and 1 no. for busbar earthing shall be provided for each board. It shall not be possible to use bus earthing truck for feeder earthing and vice-versa.
- Rating of earthing device shall be in line with associated board.
- Interlock provision shall be there so that incomer cannot be closed if bus earthing device is connected.

1.21 Indicating Lamps

- LED cluster type with OVGP (over voltage glow protection).
- LEDs used shall be of the colour of the lamp.

Color shall be as follows;

TYPE OF LAMP	:	LED COLOUR
ON	:	RED
OFF	:	GREEN
AUTOTRIP	:	AMBER
TRIP CKT. HEALTHY	:	WHITE
SPRING CHARGED	:	BLUE

1.22 Control and Selector Switches

- Control switches for circuit breaker ON/OFF control-3 position spring return to neutral with lost motion device and pistol grip handle.
- Other control and selector switches - stay put type with wing type knobs.
- Voltmeter selector switches – 7 positions as required.
- Colour : Black
- Contact Rating :

Continuous	10 amps
AC 11	4 amps, 240V
DC 11	0.5A, 110V, L/R - 40 ms

© 2016 MECON Limited. All rights reserved

1.23 Push Buttons

- Contact Rating :

Continuous	10 amps
AC 11	4 amps, 240V
DC 11	0.5A, 110V, L/R - 40 ms

- Colour :

ACCEPT	BLUE
RESET	BLACK
TEST	YELLOW

1.24 Protective Earthing

- Continuous earth bus of minimum size as per IEC 62271-200, Cl 5.3.2 made of copper, designed to carry the peak short circuit and short time fault current as specified.
- Provided at the bottom extending throughout the length of the board, bolted/brazed to the frame work of each panel with an earthing terminal at each end for terminal at each end for terminating external earth conductor.
- All non-current carrying metal work (including metallic cases of instruments and other panel mounted components effectively) bonded to the earth bus.
- Hinged doors earthed through flexible earthing braid.
- Looping of earth connection resulting in loss of earth connection to other devices when the loop is broken not permitted.
- Withdrawable units provided with self aligning, spring loaded copper scrapping earth contacts of make before/break after type, ensuring earth continuity from service to the test position.
- For cable earthing or bus bar earthing, earthing truck shall be provided. The earthing truck shall be of specified making capacity with annunciation, indication & interlock scheme. Alternatively front operated mechanically interlocked earthing switch with specified making capacity shall be provided. Earthing truck shall be provided with single phase PT.

1.25 Test and Maintenance Equipment

Each board shall be supplied with following items;

- 2 set of test plugs.
- 2 common transport trolley for interchanging withdrawable units, height of the trolley lifting arm adjustable for raising / lowering the units. (In case of cassette mounted breakers)
- Any other special purpose tools for maintenance.
- 2 Movable step ladder.

1.26 Constructional Features

001 Mechanical Design

© 2016 MECON Limited. All rights reserved

- Sheet steel clad, compartmentalized, floor mounted, free standing design. The panel shall uniform depth.
- Minimum CRCA sheet steel thickness shall be 2mm Gland plate shall be min 3mm thick.
- Doors shall be provided with lock and key arrangement Degree of protection shall be IP4X or better.
- Assembled on base channel of structural steel of minimum 40 mm height painted black.
- Operating height shall be between 450 to 1800 mm. Switchboard height not to exceed 2500 mm.
- Earthed metallic barriers between compartments and between vertical sections.
- Zinc bichromated and passivated hardwares.
- All supporting insulators in the bus chamber and bus duct shall be easily accessible with detachable covers for easy replacements.
- HT panel gland-plate shall be split type.
- The shutter plate of HT cubicle shall be of insulated material/earthed metallic.
- Transport unit not larger than 3.2 mts.
- Removable lifting arrangement for each transport unit. The lifting arrangement can be through sling from the bottom of the panel.
- Lockable front doors with concealed hinges with the door not forming part of the draw-out truck.
- Panel door shall have provision of additional knock-out suitable for addition of relay at a later date.
- Panels shall be extendable on both sides.
- Removable sheet steel covers shall be provided at rear. Alternatively, rear covers shall be of bolted construction and made up of Alu-Zinc sheet.
- Separate back covers with handles shall be provided for bus chamber & cable chamber.
- Independent explosion vent for each HT compartment.
- Explosion vent of resettable type may or may not be provided for each compartment e.g. the CB chamber, cable chamber & bus chamber.
- Control cables entry shall be from front side.
- CTs shall be located in such a way that that they are easily accessible.
- Panel door switch shall be provided for illumination inside the panel.
- All live parts shall be insulated by Raychem HT sleeves, supported by suitably designed insulators. Proper insulation of bus bars, upper and lower contacts of breakers and sealing of opening of bushings shall be provided to eliminate accidental contacts.
- Fire proof sealing shall be provided below the HT panels.
- Screw wire mesh in the power cable chamber of all the feeder is to be provided. Wire mesh will be provided in the CT compartment.

© 2016 MECON Limited. All rights reserved

- Separate slotted channel shall be provided in the cable chamber for clamping the cable.
- The manufacturer must have inhouse CNC fabrication facility. However, CNC bending and electrostatic powder coating with paint thickness minimum 50 microns can be done at vender's premises under close supervision of the manufacturer only. Fabrication of cubicle and assembly outsourcing is not acceptable.
- Transparent window need not be provided both front and back to inspect earthing switch contact since earthing truck is to be used for earthing of panels.
- Panels will be made of CRCA sheet steel/Alluzinc material, which is corrosion proof. The sheet steel is coated with unique silvery spangle composed of Al (55%) Zinc (43%) and silicon (1.6%) for perfect harmony with steel. Alluzinc sheet thickness shall be 2.0 mm. However front doors and end covers are made of CRCA sheet thickness 2 mm with special re-inforcement.
- Switchgear panels will be made up of CRCA sheet steel/Alluzinc materials which do not require painting. However, front doors shall be of CRCA sheet. Hence we shall provide painting on front doors only. Surface treatment & painting shall be done at our vendors premises.
- Panel width: For 6.6 kV- minimum 800 mm upto 1250 amps, 40KA, 3 sec, and minimum 1000 mm for more than 1250amps, 40 KA, 3 sec.

002 Labels

- Switchboard designation nameplate at the center of the board with letters not less than 25 mm high.
- Panel designation number on each panel, both in front and rear
- Inscription plate for each feeder on the door
- Door front mounted devices to have labels directly below them
- Labels made on non-rusting metal or 3 ply lamicoid with engraved inscription of white letters (minimum 3 mm high) on black background.
- Label designation and size of lettering subject to approval.
- Bus side and cable side shutters labeled for identification.

003 Surface Treatment

All metal parts of the panel to undergo surface treatment that includes de-rusting, cleaning, chemically degreasing, pickling in acid, cold rinsing, phosphating and passivating followed by spraying with two coats of zinc oxide primer and baking in oven.

Panel interior base plate	Off white shade
Exterior & interior	Epoxy based RAL-7032

1.27 Technical particulars and design parameters

© 2016 MECON Limited. All rights reserved

Sl. No.	PARTICULARS	6.6 KV Switchboard
1.	Type	VCB with stored spring mechanism
2.	Service	Indoor
3.	Enclosure	IP4X or better
4.	Nominal System Voltage (KV)	6.6
5.	Highest System Voltage	7.2
6.	No. of phases and frequency	3ph. 50 Hz
7.	Busbar material	Electrolytic grade copper as per IS:613:1984
8.	Bus Colour code	RYB
9.	System Earthing	Non-Effectively Earthed
10.	Circuit Breaker Rating	
	A) Continuous Current Rating at 45 50℃	As per SLD
	B) Short Circuit Rating	40 KA for 3 Sec. (6.6 KV)
	C) Internal Arc Current	40 KA for 1 Sec. (6.6 KV) As per IEC 62271-200
	D) Rated making Current	100 KA (6.6KV)
11.	Busbar Rating	As per SLD
12.	Power Frequency Withstand voltage	20KV for 1 minute (6.6 KV)
13	Impulse withstand voltage (1.2/50 microsecond)	60 KV (6.6 KV)
14	Control Voltage	110 VDC (For Closing,Tripping Indication)
15	Spring charge motor voltage	240 V AC
16	CT Ratio	Secondary Current 5A (Refer SLD)
17.	BPT ratio - STAR / STAR/ STAR	Primary :(6.6/√3) KV (For 6.6 KV)
18.	LPT ratio - STAR / STAR/ STAR Open Delta	Primary :(6.6/√3) KV (For 6.6 KV) Secondary : (0.11/√3) KV For requirement of Open Delta winding refer SLD

© 2016 MECON Limited. All rights reserved

19	Aux. Contacts	6 NO + 6 NC Any additional contacts, If required shall be obtained through contact multiplication by contactors / relays.
20.	Termination	
21	Incomers	XLPE FRLS Al Cables
22	Outgoings	XLPE FRLS Al Cables
23	Joints And Isolating contacts	Silver Plated
24	End Temperature of all current carrying parts including breaker	Shall be governed by IEC 694. Temperatures rise will be calculated with ambient temperature of 50℃ and considering an in-panel rating.

1.28 Type Test certificates:

a) Following Type test certificates relevant to HT switchgear as per IEC: 62271-100 will be furnished during DE:-

1. Test Duties 9T10 to T100a, t100s).
2. Single Earth Fault (SEF).
3. Double earth Fault (DEF).
4. Capacitor Duty.
5. Cable Charging Duty.
6. Impulse Test.
7. Temperature Rise Test

Short Time Rating for 3 sec equivalent to full Fault Current.

1.29 General:

1. All the protection relays supplied for the entire project shall be of same make and
they shall be divided into a limited number of categories with all relays in a particular category being identical for ease of maintenance and replacement.
2. Relay shall be suitable for both 110V & 220V DC aux. supply and IA & 5A site selectable.
3. All the protection relays supplied for the entire project shall have common software for communication through front port.
4. The disturbance recording in the numerical relays shall be automatically refreshed in FIFO basis without the need of necessarily downloading the captured DRs. It shall also be freely programmable for numbers & recording duration with a minimum of 2 numbers and total duration of minimum 8 secs.
5. All the Disturbance Records, Events and Faults data shall be automatically uploaded from the numerical relays to the server through rear port. Uploading of setting parameters and configuration files shall be on demand in Read Only

© 2016 MECON Limited. All rights reserved

format only. The measurement parameters in the numerical relays shall be accessible on demand from the central system with a programmable period based trending facility.

6. All the HT Incomers shall have a feature of blocking with time delayed releasing from all the outgoing feeders of the respective section i.e. incomer protection shall be blocked for a programmable time period if the fault is simultaneously, sensed by any of the outgoing feeder also.
7. All the motor and transformer feeders shall have flag based separate auxiliary relays for field protections like technological trip, soft starter protection, emergency trip etc in case of motor feeders and bucholz, wti, oti, prv, trip from LV side etc in case of transformer feeders. One common alarm contact and one common trip contact from these auxiliary relays shall be wired to digital input of numerical relays for SAS monitoring apart from a direct contact for tripping via master trip relay and its annunciation. However, the alarm contacts from field may be connected directly to digital input of numerical relays for monitoring and local annunciation.
8. All the numerical relays shall have password facility for change of setting and configuration parameters. The relay shall ask for input of password even if it is default.
9. At least one direct contact (contact of breaker multiplier relay is not acceptable) of the associated breaker shall be wired up to the digital input of each numerical relay for monitoring and recording breaker status during faults.
10. Each numerical relay shall have minimum 5 nos of spare digital inputs and 3 nos. of digital outputs after fulfilling all the schematic requirements.
11. All CT secondaries shall be rated for 1A only.
12. Bus coupler will have short circuit protection during its closing which will be bypassed once it closes successfully.
13. Minimum 10 sets of hard bound copies shall be submitted for all the manuals including brochures, technical reference manual, operators manual, installation & commissioning guide, application manual etc for each type of relays supplied in the project before commissioning.
14. Panel terminal diagram, inter-panel diagram, interfacing diagram between field equipments & switchgear panel shall be submitted by supplier during drawing approval stage.
15. Infra- red (IR) thermography window to be provided at the HT Switchgear Panel rear with a cut-out to view, monitoring and measurement of temperature of bus- bar, cable joint, etc.
16. Continuous current rating of VCB as specified in the SLD will be at a design ambient of 40degC in accordance with IEC-62271/IEC-60694.
17. No. of CT, PT, Relay/ release ranges & their ratings etc., no. of cables connecting each cubicle shown in the drawing are tentative which will be finalized during detailed engineering and no extra claim on this account will be considered.
18. HT Tape binding with Monoplast compound will not be used at any busbar joints, connections and terminations in the HT switchgear panel.

© 2016 MECON Limited. All rights reserved

19. Transducers or ICT is to be considered for only one phase of HT Switchboard for all motor feeders.
20. VA rating of incoming and outgoing CTs will be I5VA. However, the accuracy will be as per T.S.
21. Inspection window will be provided for viewing breaker/ cable compartment and not for viewing earthing switch contact in HT Switchboard.
22. No Analog Output Cards need to be considered in Numerical Relays.
23. The VCB will be provided with Electrical Anti-pumping feature in addition to Mechanical Anti pumping feature, if any.
24. Remote operation of breaker for motor feeders will be possible only in service position (not in test-position).
25. Annunciation for close circuit unhealthy will also be included.
26. Main bus bar rating will be same as incoming breaker rating.
27. The comprehensive motor protection relay will be complete with protections for Thermal Overload, Short Circuit, Negative phase sequence based unbalance (InvChar), Single Phasing prot, Prolonged start (I-squared Time based), Too many start sand Stalling during run (independent of prolonged start). The time delay range of stalled rotor protection should be specified.
28. The Bus coupler will have short circuit protection during its closing which will be by passed once it closes successfully.
29. Provision for connection of remote meters for Outgoing motor feeders to be included.
30. Accuracy class for protection core of CT will be 5P20.
31. MCB provided on secondary side PT will have at least two auxiliary contacts.
32. Type of resetting for flag-indicators:
33. All the auxiliary relays used for contact multiplication will have self reset type while relay used for fault monitoring will be hand reset.
34. Feeder wise list for tripping and warning annunciation signal will be decided during detailed engineering.
35. 20% spare windows will be provided in both warning and annunciation schemes.
36. Suitable MCBS will be used for short-circuit instead of HRC fuses.
37. LED type indicating lamps will be complete with Low Voltage Glow Prevention (LVGP) device.
38. Material of earth bus will be copper only.
39. Differential Protection CT will have two core of PS class (1 core spare) as per standard practice. Bidder to furnish knee point voltage, magnetizing current etc during detailed engineering.
40. Control supply buses will run throughout the switchgear. However, looped control supply will be provided instead of continuous copper bus throughout the switchboard.
41. Housing of interrupter for 6.6KV panels will be as per manufacturer's standards.

© 2016 MECON Limited. All rights reserved

42. Mimic will be metal strip type only & provided on the outside of panel rear door.
43. Seal-off bushings are not to be considered inside the Switchboard panels.
44. Vertical Busbar rating in each panel will be selected based on corresponding Breaker rating only.
45. Integral Earthing Switch is not to be provided. Earthing truck separately for cable side and bus bar side will be provided instead of integral earthing switch.
46. Panels without lifting hook are also acceptable.
47. Surge suppressors are to be provided in the cable chamber of VCB panels of ALL motor feeders including those having Vacuum Contactors in the downstream. The Vacuum Contactor panels will also have surge suppressors in the cable chamber.

1.30 Interlocking Scheme(between incomer and buscoupler)

A) <u>Momentary Paralleling</u>

Manual changeover from one incomer to another with momentary paralleling of the two supplies after checking through synchro check relay (located at Bus Coupler panel).

Manual live changeover facility shall be provided for the switchgear. When planned outage of one of the normal incoming supplies is required, the respective incomers shall be tripped automatically after the bus coupler breaker is closed manually. For this purpose, a selection shall be provided through a selector switch. Depending on the selection made, incomer to bus coupler– I or to bus section – II shall be tripped once bus coupler breaker is closed manually, thus maintaining continuity of supply.

A timer (with a time delay on pick up of 0.5. - 5 sec.) shall be provided for annunciation if the running breaker fail to trip within a preset time, (i.e. if the two sources remain paralleled for more than a preset time).

When the normal supply is to be brought back into operation, the incomer breaker shall be closed manually whereupon the bus coupler shall trip automatically.

B) **<u>Manual dead bus closing</u>** of either bus-coupler or Incommer1 or 2 shall be possible after an intentional manual trip/outage (due to under voltage) of any one incomer. However, restoration to normal shall be manual only.

Latest breaker tripping provision shall be included in the change over scheme in addition to annunciation.

Notes:-

1. All the above interlocking shall be achieved by using AM selctor switch-2 position (Auto, Manual), Trip selector switch- 4 Position (I/C-1, I/C-2, B/C, Neutral) and synchronizing selector switch- 5 position (I/C-1, I/C-2, B/C, Dead bus, Neutral).
2. Check synchro relay shall be provided in each incomer and bus coupler panel.
3. All the above schemes shall be implemented through numerical relays with

© 2016 MECON Limited. All rights reserved

software logic.

1.31 Additional Notes:-

1) Control relay and metering instruments shall be a part of breaker cubicle.
2) CT ratio, Accuracy class and breaker ratings shall be as per SLD enclosed with TS.
3) Earthing Trucks -2Nos (1 No for Cable earthing and 1 No for Bus earthing) shall be provided for each switchboard.
4) Selection of type/model of major protection relays in the switchboard shall be finalized during detailed Engineering.

1.32 SCHEDULE OF QUANTITIES:

The scope of supply shall necessarily include (but not limited to) the major items listed under this schedule, and shown in the drawings enclosed. Drg No. (MEC/11/E1/Q79R/TS/001, R-1-2 Shts).

Sl. No.	Item Description	Unit	Qty.	Remarks
1.	6.6kV, VCB Switchboard as per SLD	Set	1	

1.33 LIST OF APPROVED MAKE

Sl . No.	ITEM DESCRIPTION	ITEM DESCRIPTION
1.	6.6KV SWITCHGEAR (SWITCHBOARD WITH OWN VCB)	SCHENIDER/ SIEMENS/ ABB/ JYOTI/ L&T

1.34 COMMISSIONING ASSITANCE

Bidder shall provide testing & commissioning assistance at UCIL Jaduguda for four (4) working days of one (1) person during testing & commissioning. Bidder shall also arrange his own transport, local transport, accommodation etc during assistance at UCIL Jaduguda.

© 2016 MECON Limited. All rights reserved

PRODUCED BY AN AUTODESK EDUCATIONAL PRODUCT

DRG. NO. MEC/11/E1/Q79R/TS/001

SL.No.	[illegible]	FEEDER TYPE
1.	[illegible]	TYP-1
2.	[illegible]	TYPE-2
3.	[illegible]	TYPE-3
4.	[illegible]	TYPE-4
5.	[illegible]	TYPE-5

6.6KV HTMCC MILL SUBSTATION

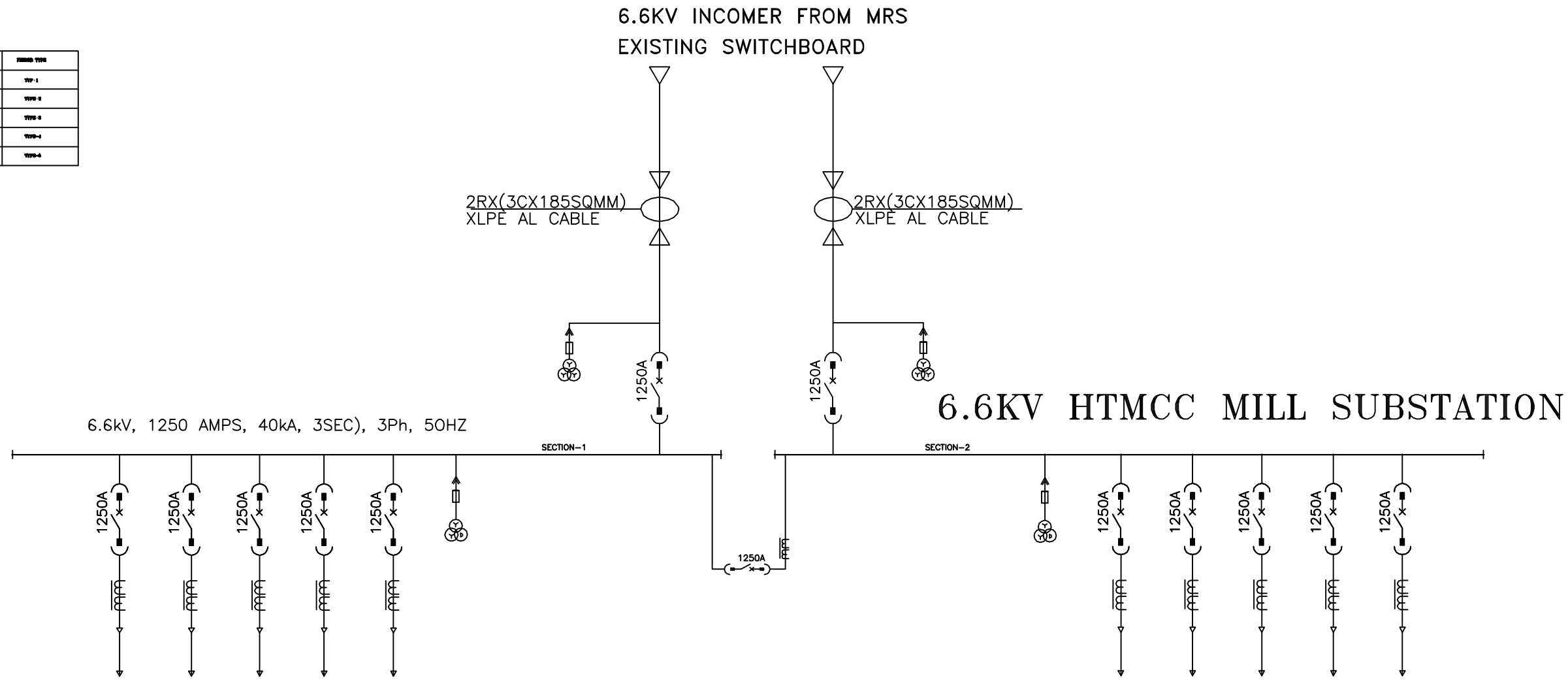

FEEDER NO. & TYPE	TYPE-4	TYPE-5	TYPE-5	TYPE-4	TYPE-4	TYPE-3	TYPE-1	TYPE-2	TYPE-1	TYPE-3	TYPE-4	TYPE-4	TYPE-5	TYPE-5	TYPE-4
CABLE SIZE IN SQ.MM XLPE-11KV(UE)	1RX3CX 185SQMM XLPE AL	1RX3CX 185SQMM XLPE AL	1RX3CX 185SQMM XLPE AL	1RX3CX 185SQMM XLPE AL	1RX3CX 185SQMM XLPE AL		2RX3CX 185SQMM XLPE AL	------	2RX3CX 185SQMM XLPE AL		1RX3CX 185SQMM XLPE AL	1RX3CX 185SQMM XLPE AL	1RX3CX 185SQMM XLPE AL	1RX3CX 185SQMM XLPE AL	1RX3CX 185SQMM XLPE AL
CT RATIO	40/5A	150/5A	150/5A	40/5A	40/5A		300/5/5A	300/5/5A	300/5/5A		40/5A	40/5A	150/5A	150/5A	40/5A
DESCRIPTION	SPARE MOTOR FDR	SPARE 1.5MVA TR FDR	O/G 1.5MVA TR FDR	225KW MOTOR FDR (S)	225KW MOTOR FDR (W)	BUS PT	INCOMER-1	BUSCOUPLER	INCOMER-2	BUS PT	225KW MOTOR FDR (W)	225KW MOTOR FDR (F)	O/G 1.5MVA TR FDR	SPARE 1.5MVA TR FDR	SPARE MOTOR FDR

FOR TENDER PURPOSE ONLY

NOTE:-
1. ALL RATINGS AND QUANTITY OF FEEDERS ARE INDICATIVE ONLY.

REV. / SRC. — CONCURRED BY.

REV.No.	DATE	ZONE	DESCRIPTION	BY	VERIFIED

REVISION

REFERENCES | DRG.No.

THIS DRAWING IS THE PREPARED BY MECON AND IS ISSUED FOR THE SPECIFIC PROJECT MENTIONED THEREIN.THIS IS NOT TO BE COPIED OR USED FOR OTHER PROJECTS UNLESS EXPRESSLY PERMITTED BY MECON.

URANIUM CORPORATION OF INDIA LTD
JADUGUDA MINES

मेकॉन लिमिटेड
MECON LIMITED

ELECTRICAL-E1

HORIZONTAL BELT FILTER AT UCIL JADUGUDA MILL

LOCATION	RANCHI
DESIGNED	M.I.AHMAD
DRAWN	M.I.AHMAD
CHECKED	J.P.MIAHRA
APPROVED	V.KAPILA
DATE:	

POWER DISTRIBUTION SCHEME

SCALE : NTS | SHEET No. 1 OF 2 | REV 1

DRG. NO. MEC/11/E1/Q79R/TS/001

PRODUCED BY AN AUTODESK EDUCATIONAL PRODUCT

PRODUCED BY AN AUTODESK EDUCATIONAL PRODUCT

DRG. NO. MEC/11/E1/Q79R/TS/001

TYPE–03

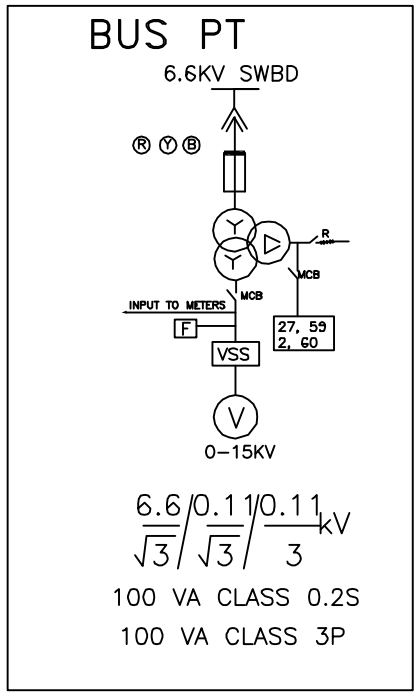

TYPE–02

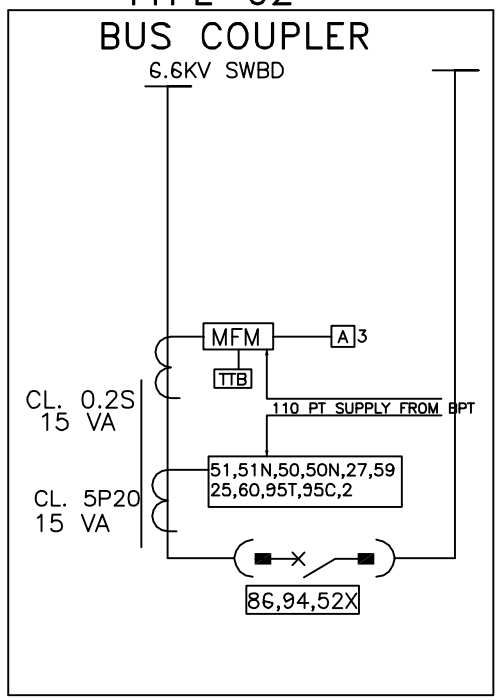

TYPE–01

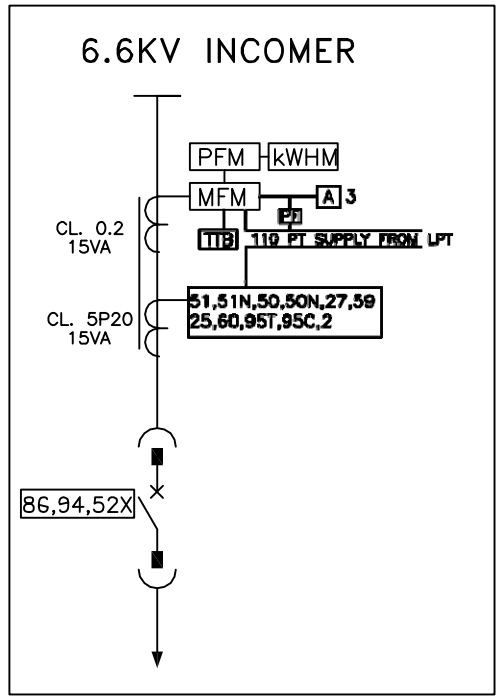

	DRAWOUT BREAKER (MOTORISED)
	CABLE TERMINATION
	CURRENT TRANSFORMER
	POTENTIAL TRANSFORMERS
MFM	MULTIFUNCTION METER
SD	SURGE DIVERTOR

R- AYS

2	TIMER
25	CHECK SYNCHRONISING RELAY
27	UNDER VOLTAGE RELAY
50	INST. OVER CURRENT RELAY
50N	INST. EARTH FAULT RELAY
51	DMT OVER CURRENT RELAY
51N	IDMT EARTH FAULT RELAY
51G	STAND BY EARTH FAULT
86	MASTER TRIP RELAY
94	ANTIPUMPING RELAY
52X	BKR AUXIALARY RELAY
59	OVERVOLTAGE RELAY
87T	TRAFO DIFF PROTECTION RELAY
64R	RESTRICTED EARTH FAULT RELAY
95	SUPERVISION REALY
97	FUSE FAILURE RELAY
99	MOT PROT RELAY

TYPE–05

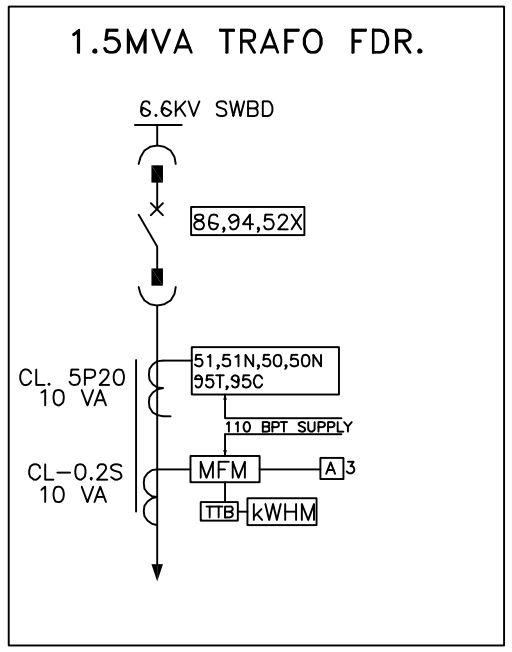

TYPE–04

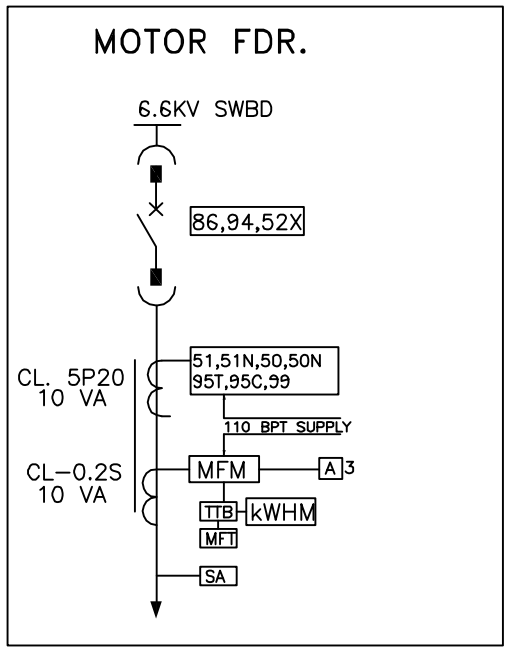

FOR TENDER PURPOSE ONLY

URANIUM CORPORATION OF INDIA LTD
JADUGUDA MINES

मेकॉन लिमिटेड
MECON LIMITED

ELECTRICAL–E1

HORIZONTAL BELT FILTER AT UCIL JADUGUDA MILL

LOCATION	RANCHI
DESIGNED	M.I.AHMAD
DRAWN	M.I.AHMAD
CHECKED	J.P.MIAHRA
APPROVED	V.KAPILA
DATE:	

POWER DISTRIBUTION SCHEME

SCALE : NTS	SHEET No. 2 OF 2	REV
DRG. NO. MEC/11/E1/Q79R/TS/001		1

REFERENCES	DRG.No.

THIS DRAWING IS THE PREPARED BY MECON AND IS ISSUED FOR THE SPECIFIC PROJECT MENTIONED THEREIN.THIS IS NOT TO BE COPIED OR USED FOR OTHER PROJECTS UNLESS EXPRESSLY PERMITTED BY MECON.

REV.	DATE	ZONE	DESCRIPTION	BY	VERIFIED

REVISION

REV. / SEC. — CONCURRED BY.

PRODUCED BY AN AUTODESK EDUCATIONAL PRODUCT